Column Planter - Small

105 Column 12" x 12" x 24"

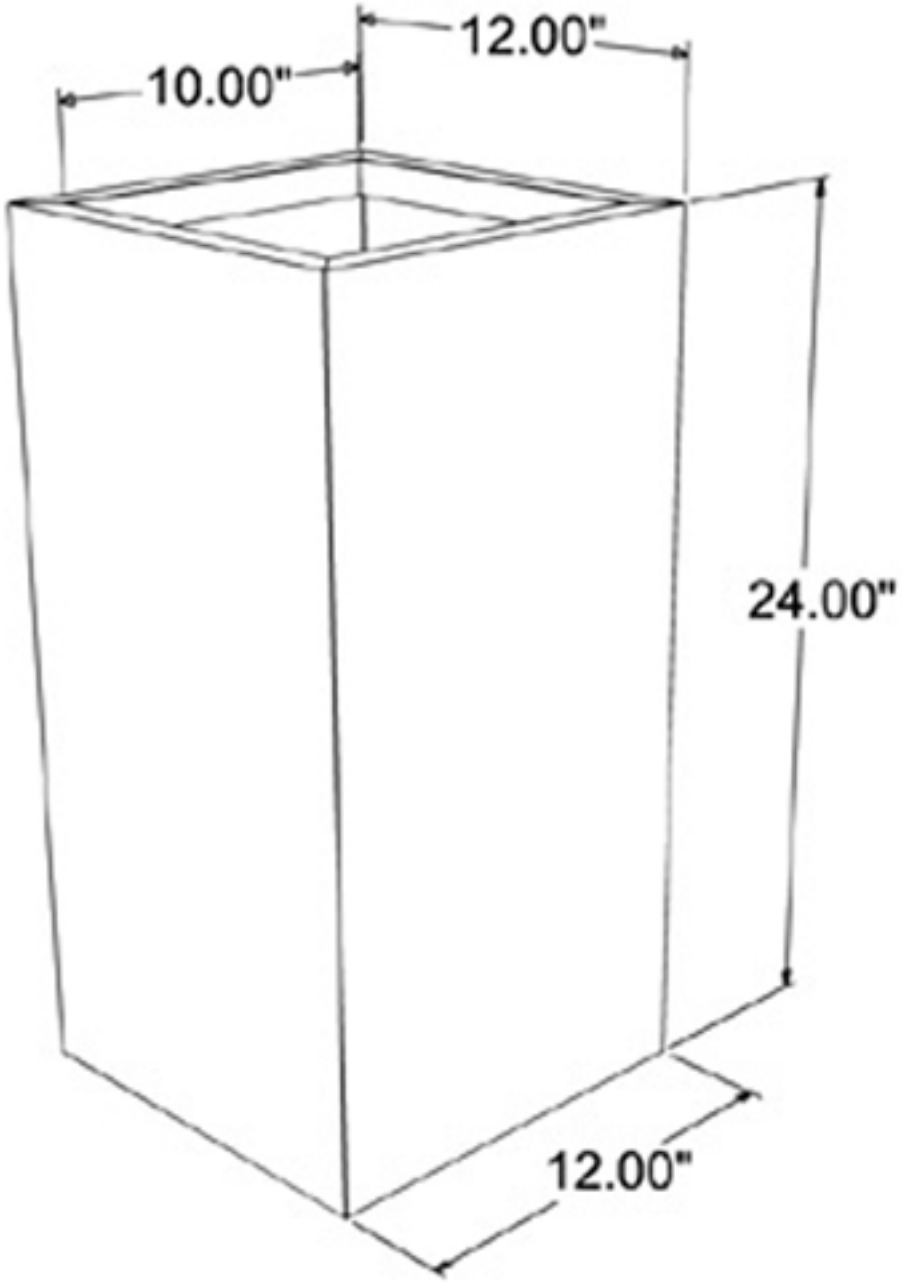

Yard Art
www.uniquegardendecor.com
(925) 487-7166