Square Fire Pit

311 - Square Fire Pit - 12" x 30" x 30"

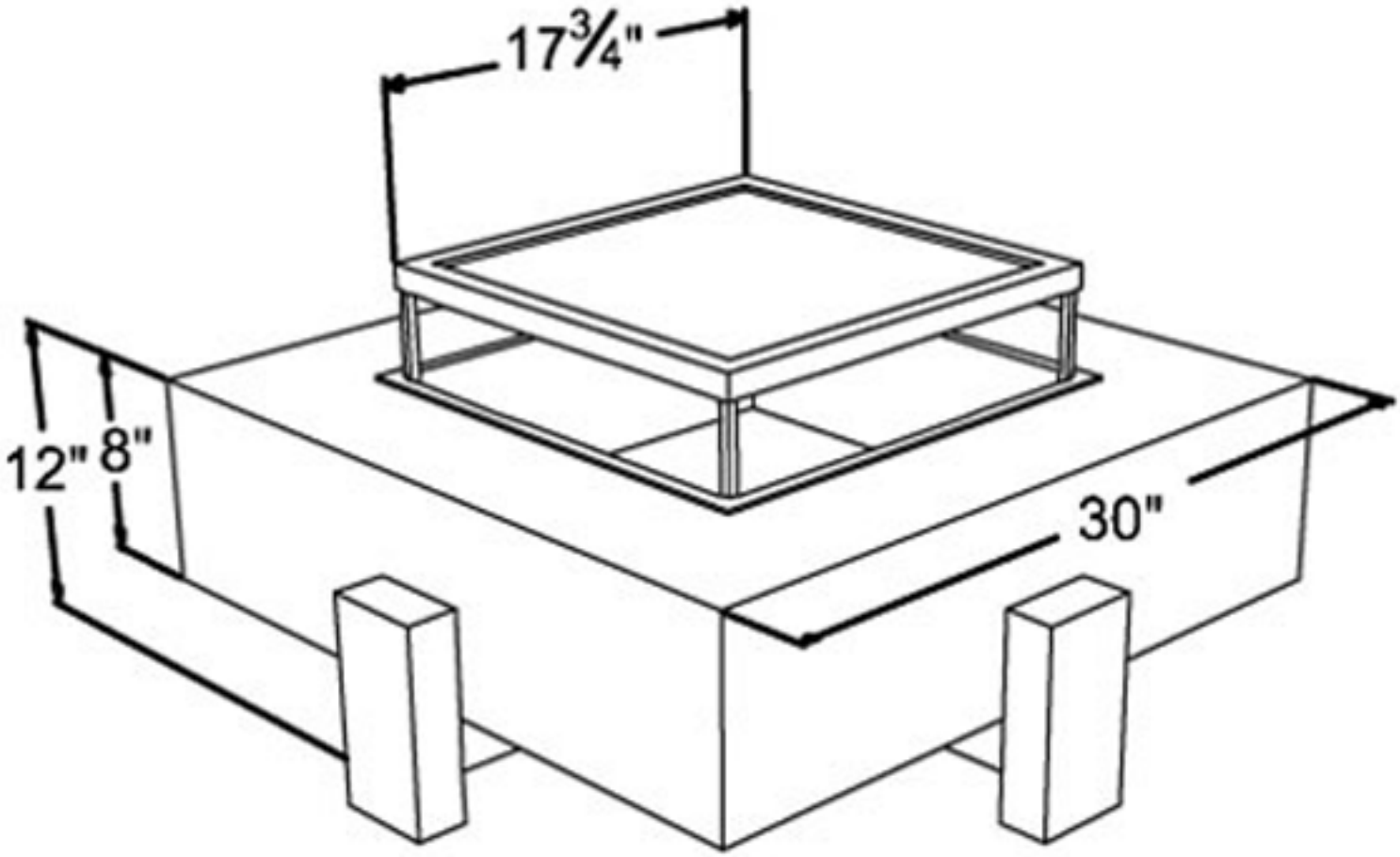

Yard Art
www.uniquegardendecor.com
(925) 487-7166